LOCUS MAP

NOT TO SCALE

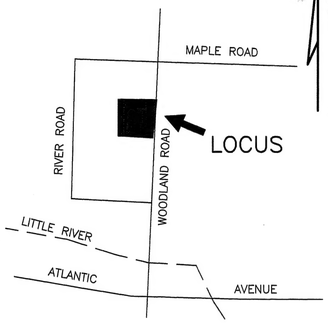

SOIL CLASS: 38 – ELDRIDGE

(SOURCE: USDA–SCS SOIL SURVEY)

BENCH MARKS: DATUM = ASSUMED

#1 WATER SHUTOFF EL 50.93

#2 SET HUB ELEV 50.00

#3 SET NAIL 10" MAPLE EL 50.17

#4 SET NAIL ROOT EL 50.80

DESIGN INTENT:

1. THE BOTTOM OF THE EFFLUENT DISPOSAL SYSTEM SHALL BE CONSTRUCTED AT ELEVATION 51.0
2. THERE IS/ARE APPROX 8" FT BELOW ORIGINAL GROUND ON THE HIGH CONTOUR THE DESIGNED EDS. (EL 51.7)

SUITABLE REPLACEMENT AREA:

SYSTEM MUST BE REBUILT IN PLACE OR REDESIGNED.

LEGEND:

50	EXISTING CONTOUR
(50)	PROPOSED CONTOUR
50.0	EXISTING SPOT ELEVATION
(50.0)	PROPOSED SPOT ELEVATION

NOTES:

1. THIS PLAN IS NOT TO BE CONSTRUED AS A BOUNDARY SURVEY. PROPERTY LINES SHOWN ARE APPROXIMATED BASED ON INFORMATION FROM THE FOLLOWING SOURCE:

   DEED, RCRD 4917–246

2. NHDES–WS&PCD SUBDIVISION APPROVAL NUMBER: N/A PRE 1967
   SEE RCRD 1332–290 (1954)
3. THIS SYSTEM IS NOT DESIGNED TO HANDLE EJECTOR PUMP, JACUZZI, OR GARBAGE DISPOSAL WASTE. BACKWASH FROM WATER SOFTENER SYSTEMS SHOULD BE DISCHARGED TO A SEPARATE DRYWELL
4. NO SURFACE WATER, WELL, OR HYDRIC A SOILS WITHIN 75' OF PROPOSED SYSTEM.

   NO HYDRIC B SOILS WITHIN 30' OF PROPOSED SYSTEM.

5 DESIGNER MUST BE CONSULTED FOR ANY PROPOSED CHANGES OR ERRORS/DISCREPANCIES FOUND DURING SYSTEM INSTALLATION. (603 929–7404)
INSTALLER IS RESPONSIBLE FOR ANY TOWN PERMITS OR INSPECTIONS REQUIRED FOR THIS INSTALLATION.

6. PROPOSED ISDS IS DESIGNED TO SERVICE 1 STRUCTURE WITH DISHWASHER, WASHING MACHINE, TOILETS, AND TUB/SHOWERS. THERE IS NO KNOWN BURIAL SITE OR CEMETERY ON THE LOT OR THE ABUTTING LOT WITHIN 100' OF ANY COMPONENT OF THE ISDS OR WELL

PLOT PLAN

SCALE: 1"=APPROX 100'

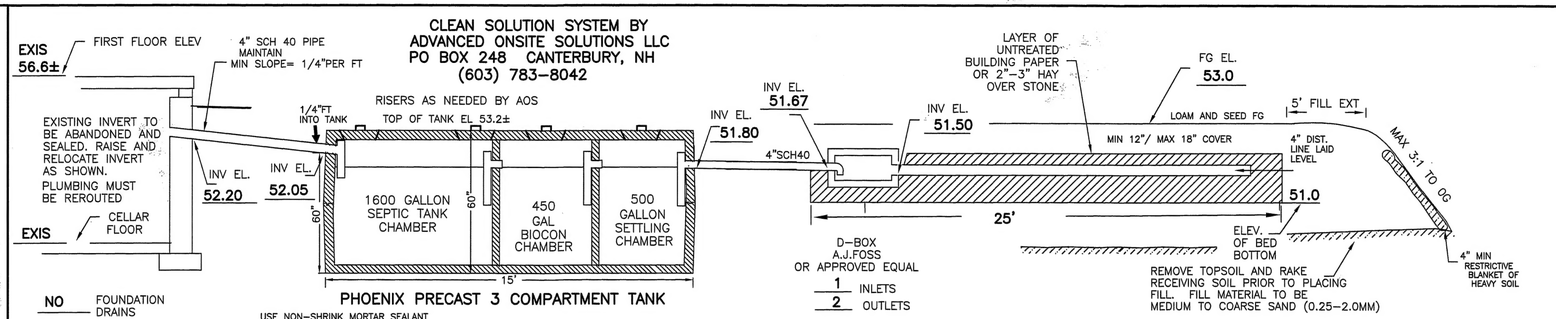

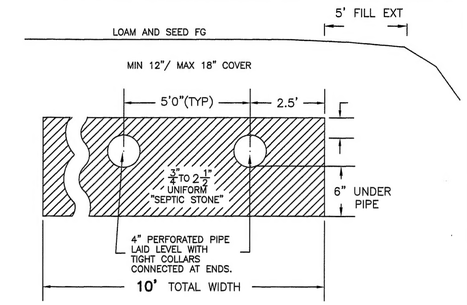

CROSS SECTION DISPOSAL SYSTEM – NOT TO SCALE

PLAN : 1"=20'

ALL SPECIFICATIONS AND RESPONSIBILITIES OUTLINED IN THE ADVANCED ONSITE SOLUTIONS CONTRACT ARE A PART OF THIS DESIGN. MAINTENANCE CONTRACT MUST BE EXECUTED PRIOR TO INSTALLATION.

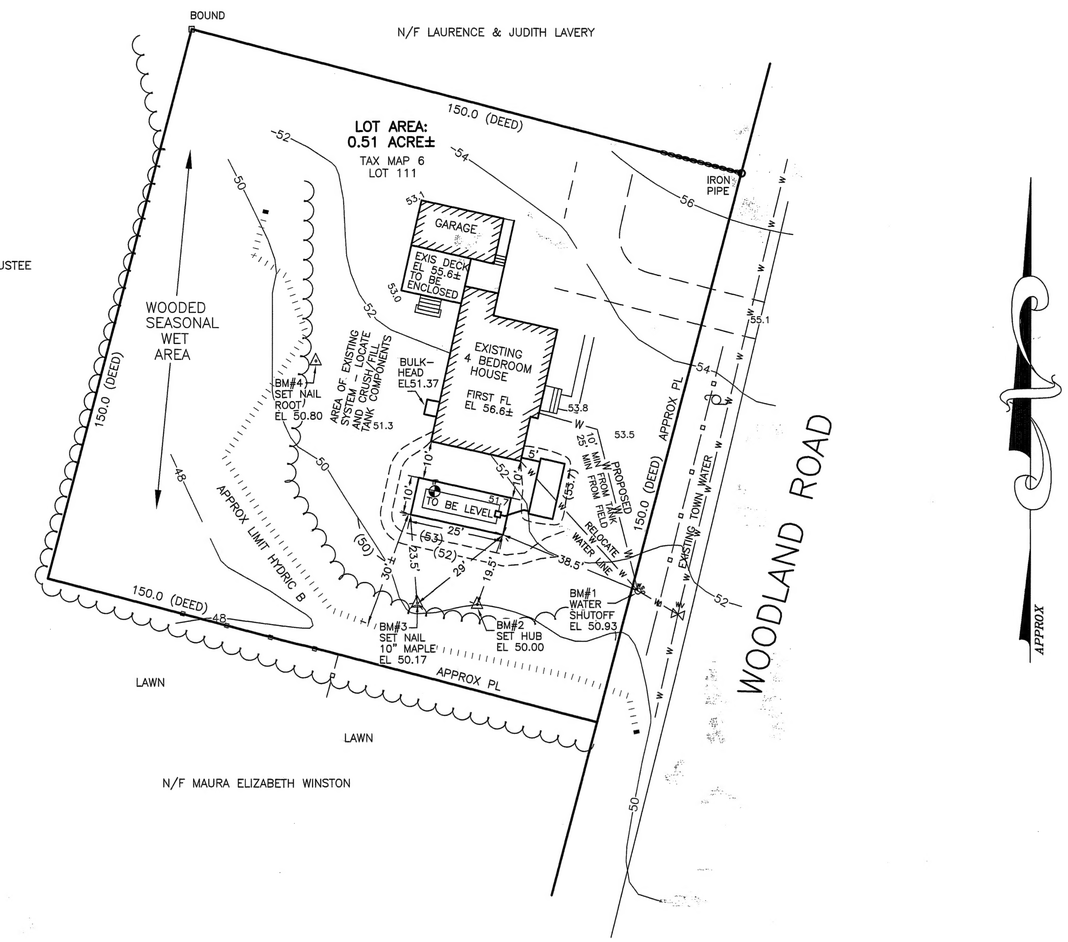

SYSTEM OWNER IS RESPONSIBLE FOR THE FOLLOWING OPERATING REQUIREMENTS MAINTENANCE CONTRACT SUBMITTED WITH APPLICATION FOR SYSTEM APPROVAL.

ENV–WS 1023.01 (a) SEPTIC TANKS SHALL BE INSPECTED FOR ACCUMULATION OF SLUDGE AND SURFACE SCUM AT LEAST ONCE EVERY YEAR. (b) WHEN THE COMBINED THICKNESS OF SLUDGE AND SURFACE SCUM EQUAL 1/3 OR MORE OF THE TANK DEPTH, THE TANK SHALL BE PUMPED BY A LICENSED SEPTIC TANK PUMPER.

ENV–WS 1023.02 TO PREVENT OBSTRUCTION OF THE DISTRIBUTION LINES AND LEACH FIELD, GREASE AND BULKY WASTE SHALL NOT BE FLUSHED OR OTHERWISE INTRODUCED INTO THE SEPTIC SYSTEM.

ENV–WS 1023.03 TOXIC AND HAZARDOUS MATERIALS SHALL NOT BE FLUSHED OR OTHERWISE INTRODUCED INTO THE SEPTIC SYSTEM.

ENV–WS 1023.04 TO PREVENT DAMAGE TO THE DISTRIBUTION LINES AND LEACH FIELD, VEHICLES, LIVESTOCK, AND OTHER HEAVY OBJECTS SHALL NOT BE ALLOWED ON THE LEACH FIELD.

ENV–WS 1023.05 IF WET AREAS APPEAR ON THE GROUND SURFACE ABOVE THE DISTRIBUTION LINES OR LEACH FIELD OR IF DISAGREEABLE ODORS OCCUR, THE SYSTEM SHALL BE INSPECTED FOR THE SOURCE OF THESE PROBLEMS, AND CORRECTIVE ACTION SHALL BE TAKEN.

TP TEST PIT DATA

DATE: JUNE 5, 2013

TOWN INSPECTOR: MIKE CUOMO

TEST PIT #1 ELEV 51.0

0 –42" MIXED OLD FILL AND ROOTS
42–60" 2.5Y5/4 FINE SAND, GRANULAR FRIABLE MOTTLED

ESHWT @ 32" (ESTIMATED PREDEVELOPMENT O.G.)
OBSERVED WATER @ 48", NO REFUSAL

PT PERC TEST DATA

PERC RATE: N/A CLEAN SOLUTION SYSTEM

DESIGN LOADING: EXISTING 4 BEDROOM HOUSE

AREA REQUIRED: 100–150 SF DISPERSAL FIELD REQUIRED PER AOS SPECS

AREA PROPOSED: 10'X25' = 250 SF DISPERSAL FIELD PROVIDED

SEPTIC SYSTEM PLAN

RULE ENV–WQ 1004.15 REPLACEMENT DESIGN FOR INSTALLATION ONLY IN EVENT OF SYSTEM FAILURE

LOCUS: 62 WOODLAND ROAD
NORTH HAMPTON, NH
TAX MAP 6 LOT 111

OWNER: DAVID MACDONALD
62 WOODLAND ROAD
NORTH HAMPTON, NH 03862

NEW HAMPSHIRE Designer of Subsurface Disposal Systems Anne W. Bielobrzeski No. 346 Department of Environmental Services

APPLICANT:
STOCKTON SERVICES
PO BOX 1306
HAMPTON, NH 03843–1306

DATE: 06/21/13

APPROVAL: CA2013114290
08/08/13

659